SUZUKI

Service Bulletin

MOTORCYCLE DIVISION **4-STROKE**
BULLETIN VS/VX/VZ/VL NO. 57
DATE: 7/9/2007

SUBJECT: **SUPPLEMENTAL SERVICE MANUAL INFORMATION**

MODEL: **VZR1800NK8**

REFERENCE: **VZR1800 SERVICE MANUAL (P/N 99500-39291-03E)**

NOTICE:
This bulletin contains additional technical information for the VZR1800NK8. Please place a copy of this bulletin with your dealership's VZR1800 Service Manual.

CONTENTS

NOTE:
Any difference between VZR1800K7 and VZR1800NK8 in service data are clearly indicated with an asterisk mark (*).

AFFECTED DEPARTMENTS:
The following departments in your dealership should be notified of this information:

☒ **Management** ☒ **Service** ☐ Warranty ☐ Sales ☒ **Parts** ☐ Accessories

American Suzuki Motor Corporation
Technical Service Department
Motorcycle / ATV / Scooter

SPECIFICATIONS

DIMENSIONS AND DRY MASS

Overall length	2 450 mm (96.5 in)	E-03, 33
	2 480 mm (97.6 in)	Others
Overall width	875 mm (34.4 in)	
Overall height	1 185 mm (46.7 in)	
Wheelbase	1 710 mm (67.3 in)	
Ground clearance	130 mm (5.1 in)	
Seat height	705 mm (27.8 in)	
Dry mass	319 kg (703 lbs)	

ENGINE

Type	Four-stroke, liquid-cooled, DOHC, 54-degree, V-twin
Number of cylinders	2
Bore	112.0 mm (4.409 in)
Stroke	90.5 mm (3.563 in)
Displacement	1 783 cm³ (108.8 cu. in)
Compression ratio	10.5 : 1
Fuel system	Fuel injection
Air cleaner	Non-woven fabric element
Starter system	Electric
Lubrication system	Semi-Dry sump
Idle speed	900 ± 100 r/min

DRIVE TRAIN

Clutch	Wet multi-plate type
Transmission	5-speed constant mesh
Gearshift pattern	1-down, 4-up
Primary reduction ratio	1.758 (58/33)
Gear ratios, Low	2.187 (35/16)
2nd	1.400 (28/20)
3rd	1.038 (27/26)
4th	0.827 (24/29)
Top	0.685 (24/35)
Final reduction ratio	2.823 (18/17 x 32/12)
Drive system	Shaft Drive

CHASSIS

Front suspension	Inverted telescopic, coil spring, oil damped
Rear suspension	Link type, coil spring, oil damped
Front fork stroke	130 mm (5.1 in)
Rear wheel travel	115 mm (4.6 in)
Caster	31° 15'
Trail	124 mm (4.9 in)
Steering angle	37° (right & left)
Turning radius	3.3 m (10.8 ft)
Front brake	Disc brake, twin
Rear brake	Disc brake
Front tire size	130/70R18M/C 63 V, tubeless
Rear tire size	240/40R18M/C 79 V, tubeless

ELECTRICAL

Ignition type	Electronic ignition (Transistorized)	
Ignition timing	5° B.T.D.C. at 900 r/min	
Spark plug	NGK CR8EK or DENSO U24ETR	
Battery	12 V 64.8 kC (18 Ah)/10HR	
Generator	Three-phase A.C. generator	
Main fuse	30 A	
Fuse	10/10/10/15/15/15 A	
Headlight	12 V 60/55 W (H4)	
Position light	12 V 5 W	
Brake light/Taillight	LED	
Front turn signal light	12 V 21/5 W	E-03, 28, 33
	12 V 21 W	Others
Rear turn signal light	12 V 21 W	
License light	12 V 5 W	
Speedometer light	LED	
Tachometer light	LED	
High beam indicator light	LED	
Turn signal indicator light	LED	
Neutral indicator light	LED	
Coolant temperature/Oil pressure indicator light	LED	
Fuel level indicator light	LED	
FI indicator light	LED	

CAPACITIES

Fuel tank	18.5 L (4.9/4.1 US/Imp gal)	E-33
	19.5 L (5.2/4.3 US/Imp gal)	Others
Engine oil, oil change	3 400 ml (3.6/3.0 US/Imp qt)	
with filter change	3 600 ml (3.8/3.2 US/Imp qt)	
Overhaul	4 700 ml (5.0/4.1 US/Imp qt)	
Final gear oil	200 – 220 ml (6.8/7.0 – 7.4/7.7 US/Imp oz)	
Coolant	2.7 L (2.9/2.4 US/Imp qt)	

SERVICE DATA

VALVE + GUIDE

Unit: mm (in)

ITEM	STANDARD		LIMIT
Valve diam.	IN.	42 (1.65)	—
	EX.	38 (1.50)	—
Tappet clearance (when cold)	IN.	0.09 – 0.16 (0.004 – 0.006)	—
	EX.	0.20 – 0.30 (0.008 – 0.012)	—
Valve guide to valve stem clearance	IN.	0.010 – 0.037 (0.0004 – 0.0015)	—
	EX.	0.030 – 0.057 (0.0012 – 0.0022)	—
Valve guide I.D.	IN. & EX.	6.000 – 6.012 (0.2362 – 0.2367)	—
Valve stem O.D.	IN.	5.975 – 5.990 (0.2352 – 0.2358)	—
	EX.	5.955 – 5.970 (0.2344 – 0.2350)	—
Valve stem deflection	IN. & EX.	—	0.35 (0.014)
Valve stem runout	IN. & EX.	—	0.05 (0.002)
Valve head thickness	IN. & EX.	—	0.5 (0.02)
Valve seat width	IN.	1.1 – 1.3 (0.043 – 0.051)	—
	EX.	1.4 – 1.6 (0.055 – 0.063)	—
Valve head radial runout	IN. & EX.	—	0.03 (0.001)
Valve spring free length	IN. & EX.	—	39.8 (1.57)
Valve spring tension	IN. & EX.	137 – 157 N (14.0 – 16.0 kgf, 30.9 – 35.3 lbs) at length 36.6 mm (1.44 in)	—

CAMSHAFT + CYLINDER HEAD

Unit: mm (in)

ITEM	STANDARD		LIMIT
Cam height	IN.	40.880 – 40.930 (1.6094 – 1.6114)	40.580 (1.5976)
	EX.	40.880 – 40.930 (1.6094 – 1.6114)	40.580 (1.5976)
Camshaft journal oil clearance	IN. & EX.	0.032 – 0.066 (0.0013 – 0.0026)	0.150 (0.0059)
Camshaft journal holder I.D.	IN. & EX.	24.012 – 24.025 (0.9454 – 0.9459)	—
Camshaft journal O.D.	IN. & EX.	23.959 – 23.980 (0.9433 – 0.9441)	—

ITEM	STANDARD		LIMIT
Camshaft runout	IN. & EX.	—	0.10 (0.004)
Cam chain pin (at arrow "3")	18th pin		—
Cylinder head distortion	—		0.05 (0.002)

CYLINDER + PISTON + PISTON RING

Unit: mm (in)

ITEM	STANDARD		LIMIT
Compression pressure (Automatic de-comp. actuated)	1 100 – 1 500 kPa (11.0 – 15.0 kgf/cm², 156 – 213 psi)		800 kPa (8.0 kgf/cm², 114 psi)
Compression pressure difference	—		200 kPa (2.0 kgf/cm², 28 psi)
Piston to cylinder clearance	0.018 – 0.043 (0.0007 – 0.0017)		0.120 (0.0047)
Cylinder bore	112.000 – 112.015 (4.4094 – 4.4100)		Nicks or Scratches
Piston diam.	111.967 – 111.983 (4.4081 – 4.4088) Measure at 10 mm (0.4 in) from the skirt end.		111.880 (4.4047)
Cylinder distortion	—		0.05 (0.002)
Piston ring free end gap	1st	Approx. 15.7 (0.62)	12.6 (0.50)
	2nd	Approx. 14.5 (0.57)	11.6 (0.46)
Piston ring end gap	1st	0.10 – 0.25 (0.004 – 0.010)	0.50 (0.020)
	2nd	0.10 – 0.25 (0.004 – 0.010)	0.50 (0.020)
Piston ring to groove clearance	1st	—	0.180 (0.0071)
	2nd	—	0.150 (0.0059)
Piston ring groove width	1st	0.93 – 0.95 (0.0366 – 0.0374)	—
		1.55 – 1.57 (0.0610 – 0.0618)	—
	2nd	1.21 – 1.23 (0.0476 – 0.0484)	—
	Oil	2.51 – 2.53 (0.0988 – 0.0996)	—
Piston ring thickness	1st	0.86 – 0.91 (0.034 – 0.036)	—
		1.38 – 1.40 (0.054 – 0.055)	—
	2nd	1.17 – 1.19 (0.046 – 0.047)	—
Piston pin bore I.D.	23.002 – 23.008 (0.9056 – 0.9058)		23.030 (0.9067)
Piston pin O.D.	22.995 – 23.000 (0.9053 – 0.9055)		22.980 (0.9047)

CONROD + CRANKSHAFT

Unit: mm (in)

ITEM	STANDARD	LIMIT
Conrod small end I.D.	23.010 – 23.018 (0.9059 – 0.9062)	23.040 (0.9071)
Conrod big end side clearance	0.100 – 0.200 (0.0039 – 0.0078)	0.30 (0.012)
Conrod big end width	23.95 – 24.00 (0.943 – 0.945)	—
Crank pin width	24.10 – 24.15 (0.9488 – 0.9508)	—
Conrod big end oil clearance	0.032 – 0.056 (0.0013 – 0.0022)	0.080 (0.0031)
Crank pin O.D.	54.976 – 55.000 (2.1644 – 2.1654)	—
Crankshaft journal oil clearance	0.016 – 0.034 (0.0006 – 0.0013)	0.080 (0.0031)
Crankshaft journal O.D.	54.982 – 55.000 (2.1646 – 2.1654)	—
Crankshaft thrust bearing thickness	2.250 – 2.550 (0.0886 – 0.1004)	—
Crankshaft thrust clearance	0.100 – 0.200 (0.0039 – 0.0079)	—
Crankshaft runout	—	0.05 (0.002)

OIL PUMP

ITEM	STANDARD	LIMIT
Oil pressure (at 60 °C, 140 °F)	Above 400 kPa (4.0 kgf/cm², 57 psi) Below 700 kPa (7.0 kgf/cm², 100 psi) at 3 000 r/min	—

CLUTCH

Unit: mm (in)

ITEM		STANDARD	LIMIT
Clutch cable play		10 – 15 (0.4 – 0.6)	—
Clutch release screw		1 turn back	—
Drive plate thickness	No. 1	3.52 – 3.68 (0.139 – 0.145)	3.22 (0.127)
	No. 2	1.92 – 2.08 (0.076 – 0.082)	—
Driven plate thickness	No. 1	2.82 – 2.98 (0.111 – 0.117)	—
	No. 2	3.32 – 3.48 (0.131 – 0.137)	3.17 (0.125)
Driven plate claw width	No. 1 & No. 2	7.96 – 8.15 (0.313 – 0.321)	7.16 (0.282)
Driven plate distortion		—	0.10 (0.004)
Clutch spring free length		51.3 (2.02)	48.8 (1.92)

THERMOSTAT + RADIATOR + FAN + COOLANT

ITEM	STANDARD		LIMIT
Thermostat valve opening temperature	Approx. 88 °C (190 °F)		—
Thermostat valve lift	Over 8.0 mm (0.31 in) at 100 °C (212 °F)		—
Engine coolant temperature sensor resistance	20 °C (68 °F)	Approx. 2.45 kΩ	—
	50 °C (122 °F)	Approx. 0.811 kΩ	—
	80 °C (176 °F)	Approx. 0.318 kΩ	—
	110 °C (230 °F)	Approx. 0.142 kΩ	—
Radiator cap valve opening pressure	93 – 123 kPa (0.93 – 1.23 kgf/cm², 13.2 – 17.5 psi)		—
Cooling fan operating temperature	OFF → ON	Approx. 105 °C (221 °F)	—
	ON → OFF	Approx. 100 °C (212 °F)	—
Engine coolant type	Use an anti-freeze/coolant compatible with aluminum radiator, mixed with distilled water only, at the ratio of 50:50.		—
Engine coolant	Reservoir tank side	Approx. 250 ml (0.3/0.2 US/Imp qt)	—
	Engine side	Approx. 2 450 ml (2.6/2.2 US/Imp qt)	—

DRIVE TRAIN

Unit: mm (in) Expect ratio

ITEM		STANDARD	LIMIT
Primary reduction ratio		1.757 (55/55 × 58/33)	—
Secondary reduction ratio		1.058 (18/17)	—
Final reduction ratio		2.666 (32/12)	—
Gear ratio	Low	2.187 (35/16)	—
	2nd	1.400 (28/20)	—
	3rd	1.038 (27/26)	—
	4th	0.827 (24/29)	—
	Top	0.685 (24/35)	—
Shift fork to groove clearance		0.1 – 0.3 (0.004 – 0.012)	0.50 (0.020)
Shift fork groove width		5.0 – 5.1 (0.197 – 0.201)	—
Shift fork thickness		4.8 – 4.9 (0.189 – 0.193)	—
Gearshift lever height		45 – 55 (1.8 – 2.2)	—

DRIVELINE/AXLE

Unit: mm (in)

ITEM	STANDARD/SPECIFICATION	LIMIT
Secondary bevel gear backlash	0.03 – 0.15 (0.001 – 0.006)	—
Final bevel gear backlash	0.08 – 0.16 (0.003 – 0.006)	—
Damper spring free length	—	64.6 (2.54)
Final gear oil type	Hypoid gear oil SAE #90, API grade GL-5	—
Final gear oil capacity	200 – 220 ml (6.8/7.0 – 7.4/7.7 US/Imp oz)	—

INJECTOR + FUEL PUMP + FUEL PRESSURE REGULATOR

ITEM	SPECIFICATION	NOTE
Injector resistance	11 – 13 Ω at 23 °C (73 °F)	
Fuel pump discharge amount	168 ml and more (5.7/5.9 US/Imp oz) for 10 seconds at 300 kPa (3.0 kgf/cm², 43 psi)	
Fuel pressure regulator operating set pressure	Approx. 300 kPa (3.0 kgf/cm², 43 psi)	

FI-SENSORS

ITEM	SPECIFICATION		NOTE
CKP sensor resistance	190 – 290 Ω		
CKP sensor peak voltage	1.5 V and more		When cranking
IAP sensor input voltage (F & R)	4.5 – 5.5 V		
IAP sensor output voltage (F & R)	Approx. 2.6 V at idle speed		
TP sensor input voltage	4.5 – 5.5 V		
TP sensor resistance	Closed	Approx. 1.1 kΩ	
	Opened	Approx. 4.3 kΩ	
TP sensor output voltage	Closed	Approx. 1.1 V	
	Opened	Approx. 4.3 V	
ECT sensor input voltage	4.5 – 5.5 V		
ECT sensor output voltage	0.15 – 4.84 V		
ECT sensor resistance	Approx. 2.45 kΩ at 20 °C (68 °F)		
IAT sensor input voltage	4.5 – 5.5 V		
IAT sensor output voltage	0.15 – 4.84 V		
IAT sensor resistance	Approx 2.45 kΩ at 20 °C (68 °F)		
TO sensor resistance	16.5 – 22.3 kΩ		
TO sensor voltage	Normal	0.4 – 1.4 V	
	Leaning	3.7 – 4.4 V	When leaning 65°
GP switch voltage	0.6 V and more		From 1st to top
Injector voltage	Battery voltage		
Ignition coil primary peak voltage	250 V and more		When cranking
Ignition coil/Plug cap primary peak voltage	80 V and more		When cranking
STP sensor input voltage	4.5 – 5.5 V		
STP sensor resistance	Closed	Approx. 0.6 kΩ	
	Opened	Approx. 4.2 kΩ	

ITEM	SPECIFICATION		NOTE
STP sensor output voltage	Closed	Approx. 0.6 V	
	Opened	Approx. 4.2 V	
STV actuator resistance	Approx. 7 Ω		
EXCVA position sensor input voltage	4.5 – 5.5 V		
EXCVA position sensor resistance	Approx. 3.1 kΩ		At adjustment position
EXCVA position sensor output voltage	Closed	0.5 – 1.5 V	
	Opened	3.5 – 4.5 V	
Heated oxygen sensor output voltage	0.4 V and less at idle speed		E-02, 19, 24
	0.6 V and more at 3 000 r/min		E-02, 19, 24
Heated oxygen sensor resistance	4.0 – 5.5 Ω at 23 °C (73.4 °F)		E-02, 19, 24
PAIR solenoid valve resistance	18 – 22 Ω at 20 – 30 °C (68 – 86 °F)		

THROTTLE BODY

ITEM	SPECIFICATION
I.D. No.	48G1 (For E-33), 48G0 (Others)
Bore size	56 mm
Idle r/min	900 ± 100 r/min/Warmed engine
Throttle cable play	2.0 – 4.0 mm (0.08 – 0.16 in)

ELECTRICAL

Unit: mm (in)

ITEM	SPECIFICATION		NOTE
Firing order	1-2		
Spark plug	Type	NGK: CR8EK DENSO: U24ETR	
	Gap	0.6 – 0.7 (0.024 – 0.028)	
Spark performance	Over 8 (0.3) at 1 atm.		
CKP sensor resistance	190 – 290 Ω		Bl – G
Ignition coil resistance	Primary	1.8 – 3.0 Ω	⊕ tap – ⊖ tap
	Secondary	16 – 26 kΩ	⊖ tap – Plug cap
Ignition coil/Plug cap resistance	Primary	1.1 – 1.9 Ω	⊕ tap – ⊖ tap
	Secondary	10.8 – 16.2 kΩ	Plug cap – ⊖ tap
CKP sensor peak voltage	1.5 V and more		⊕ Bl ⊖ G
Ignition coil primary peak voltage	250 V and more		Front ⊕: G ⊖: Ground Rear ⊕: Y ⊖: Ground
Ignition coil/Plug cap primary peak voltage	80 V and more		Front ⊕: B ⊖: Ground Rear ⊕: W/Bl ⊖: Ground
Generator coil resistance	0.2 – 1.5 Ω		B – B
Generator Max. output	Approx. 400 W at 5 000 r/min		

ITEM			SPECIFICATION		NOTE
Generator no-load voltage (When engine is cold)			70 V (AC) and more at 5 000 r/min		
Regulated voltage			14.0 – 15.5 V at 5 000 r/min		
Starter relay resistance			3 – 6 Ω		
Battery	Type designation		FTZ16-BS		
	Capacity		12 V 64.8 kC (18 Ah)/10 HR		
Fuse size	Headlight	HI	10 A		
		LO	10 A		
	Fuel		10 A		
	Ignition		15 A		
	Turn signal		15 A		
	Fan motor		15 A		
	Main		30 A		
Starter motor brush length			Standard	12.5 (0.49)	
			Limit	6.0 (0.24)	

WATTAGE

Unit: W

ITEM		SPECIFICATION	
		E-03, 28, 33	E-02, 19, 24
Headlight	HI	60	←
	LO	55	←
Position light		* 5	←
Brake light/Taillight		LED	←
Front turn signal light		21/5	21
Rear turn signal light		21	←
Speedometer		LED	←
Tachometer		LED	←
Turn signal indicator light		LED	←
High beam indicator light		LED	←
Neutral indicator light		LED	←
Fuel level indicator light		LED	←
Coolant temperature/Oil pressure indicator light		LED	←
FI indicator light		LED	←
License light		5	←

BRAKE + WHEEL

Unit: mm (in)

ITEM			STANDARD	LIMIT
Rear brake pedal height			25 – 35 (1.0 – 1.4)	—
Brake disc thickness		Front	5.0 ± 0.2 (0.197 ± 0.008)	4.5 (0.18)
		Rear	$7^{0}_{-0.4}$ $(0.276^{0}_{-0.016})$	6.3 (0.25)
Brake disc runout (Front & Rear)			—	0.30 (0.012)
Master cylinder bore		Front	15.870 – 15.913 (0.6248 – 0.6265)	—
		Rear	14.000 – 14.043 (0.5512 – 0.5529)	—
Master cylinder piston diam.		Front	15.827 – 15.854 (0.6231 – 0.6242)	—
		Rear	13.957 – 13.984 (0.5495 – 0.5506)	—
Brake caliper cylinder bore	Leading	Front	30.280 – 30.356 (1.1921 – 1.1951)	—
	Trailing		34.010 – 34.086 (1.3390 – 1.3420)	—
	Leading & Trailing	Rear	30.230 – 30.306 (1.1902 – 1.1931)	—
Brake caliper piston diam.	Leading	Front	30.150 – 30.200 (1.1870 – 1.1890)	—
	Trailing		33.884 – 33.934 (1.3340 – 1.3360)	—
	Leading & Trailing	Rear	30.150 – 30.200 (1.1870 – 1.1890)	—
Brake fluid type			DOT 4	—
Wheel rim runout (Front & Rear)		Axial	—	2.0 (0.08)
		Radial	—	2.0 (0.08)
Wheel axle runout		Front	—	0.25 (0.010)
		Rear	—	0.25 (0.010)
Wheel rim size		Front	18M/C × MT 3.50	—
		Rear	18M/C × MT 8.50	—
Tire size		Front	130/70R18M/C 63V, tubeless	—
		Rear	240/40R18M/C 79V, tubeless	—
Tire type		Front	DUNLOP: D221FA	—
		Rear	DUNLOP: D221	—
Tire tread depth		Front	—	1.6 (0.06)
		Rear	—	2.0 (0.08)

SUSPENSION

Unit: mm (in)

ITEM	STANDARD	LIMIT
Front fork stroke	130 (5.1)	—
Front fork spring free length	* 395 (15.6)	* 387 (15.2)
Front fork inner tube O.D.	46 (1.8)	—
Front fork oil level (without spring, inner tube fully compressed)	* 122 (4.8)	—
Front fork oil type	SUZUKI FORK OIL L01 or an equivalent fork oil	—
Front fork oil capacity (each leg)	* 700 ml (23.7/24.6 US/Imp oz)	—
Rear shock absorber spring adjuster	4/7	—
Rear wheel travel	118 (4.6)	—
Swingarm pivot shaft runout	—	0.3 (0.01)

TIRE PRESSURE

COLD INFLATION TIRE PRESSURE	SOLO RIDING			DUAL RIDING		
	kPa	kgf/cm²	psi	kPa	kgf/cm²	psi
FRONT	250	2.50	36	250	2.50	36
REAR	290	2.90	42	290	2.90	42

FUEL + OIL

ITEM	SPECIFICATION		NOTE
Fuel type	Use only unleaded gasoline of at least 90 pump octane (R/2 + M/2). Gasoline containing MTBE (Methyl Tertiary Butyl Ether), less than 10% ethanol, or less than 5% methanol with appropriate cosolvents and corrosion inhibitor is permissible.		E-03, 28, 33
	Gasoline used should be graded 95 octane or higher. An unleaded gasoline is recommended.		The others
Fuel tank capacity	18.5 L (4.9/4.1 US/Imp gal)		E-33
	19.5 L (5.2/4.3 US/Imp gal)		The others
Engine oil type	SAE 10W-40, API SF/SG or SH/SJ with JASO MA		
Engine oil capacity	Change	3 400 ml (3.6/3.0 US/Imp qt)	
	Filter change	3 600 ml (3.8/3.2 US/Imp qt)	
	Overhaul	4 700 ml (5.0/4.1 US/Imp qt)	

REAR WHEEL

CONSTRUCTION

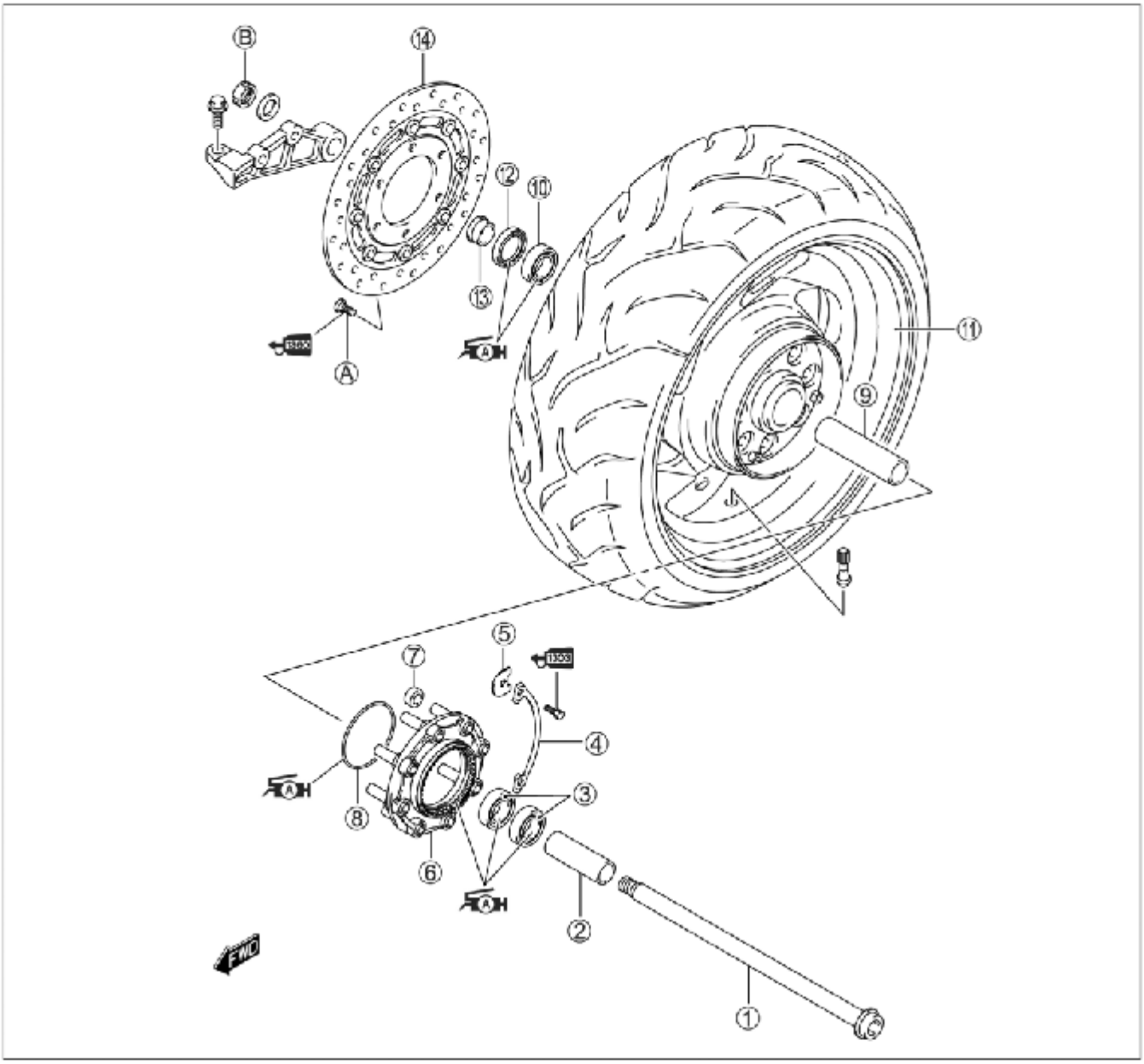

①	Rear axle	⑦	Damper	⑬	Collar
②	Spacer	⑧	O-ring	⑭	Brake disc
③	Bearing	⑨	Spacer	Ⓐ	Rear brake disc bolt
④	Lock washer	⑩	Bearing	Ⓑ	Rear axle nut
⑤	Driven joint stopper	⑪	Rear wheel		
⑥	Driven joint	⑫	Dust seal		

ITEM	N·m	kgf-m	lb-ft
Ⓐ	23	2.3	16.5
Ⓑ	110	11.0	79.5

HEADLIGHT BEAM ADJUSTMENT

The headlight beam can be adjusted both horizontally and vertically if necessary.

- Remove the right and left fasteners.

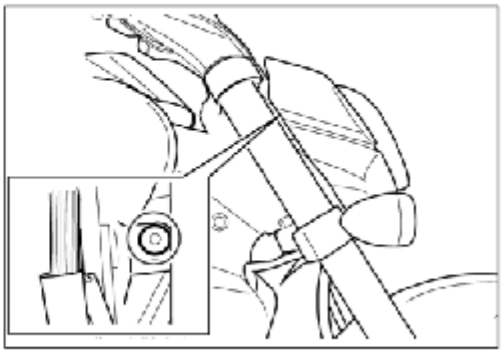

- Pull the lower part of the headlight upper cover forward ① to unhook the lower hooks. Then pull the upper part of the cover upward to unhook the upper hook.

NOTE:
Stick protection tape on the headlight lens to avoid scratching.

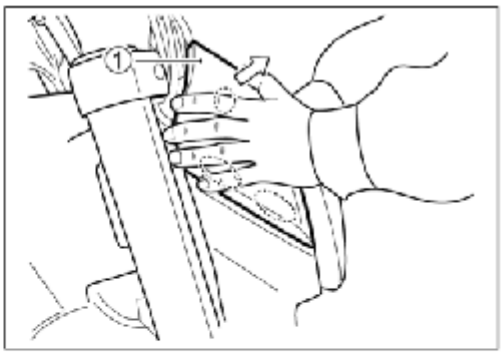

To adjust the beam horizontally
Turn the screw ① located on the left side of the headlight unit clockwise or counterclockwise.

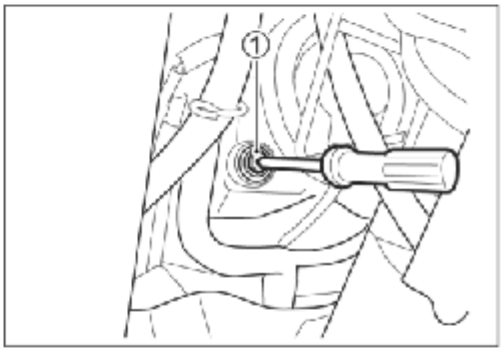

To adjust the beam vertically
Turn the screw ② located on the right side of the headlight unit clockwise or counterclockwise.

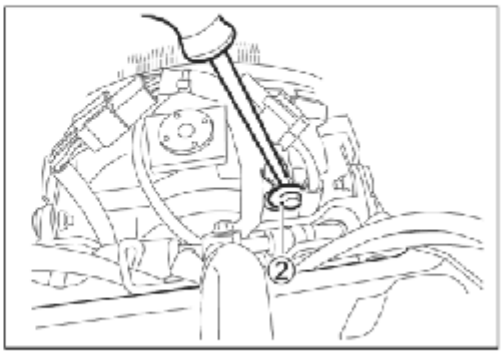

Install the headlight upper cover in the reverse order of removal.

WIRING DIAGRAM

E-02, 19, 24

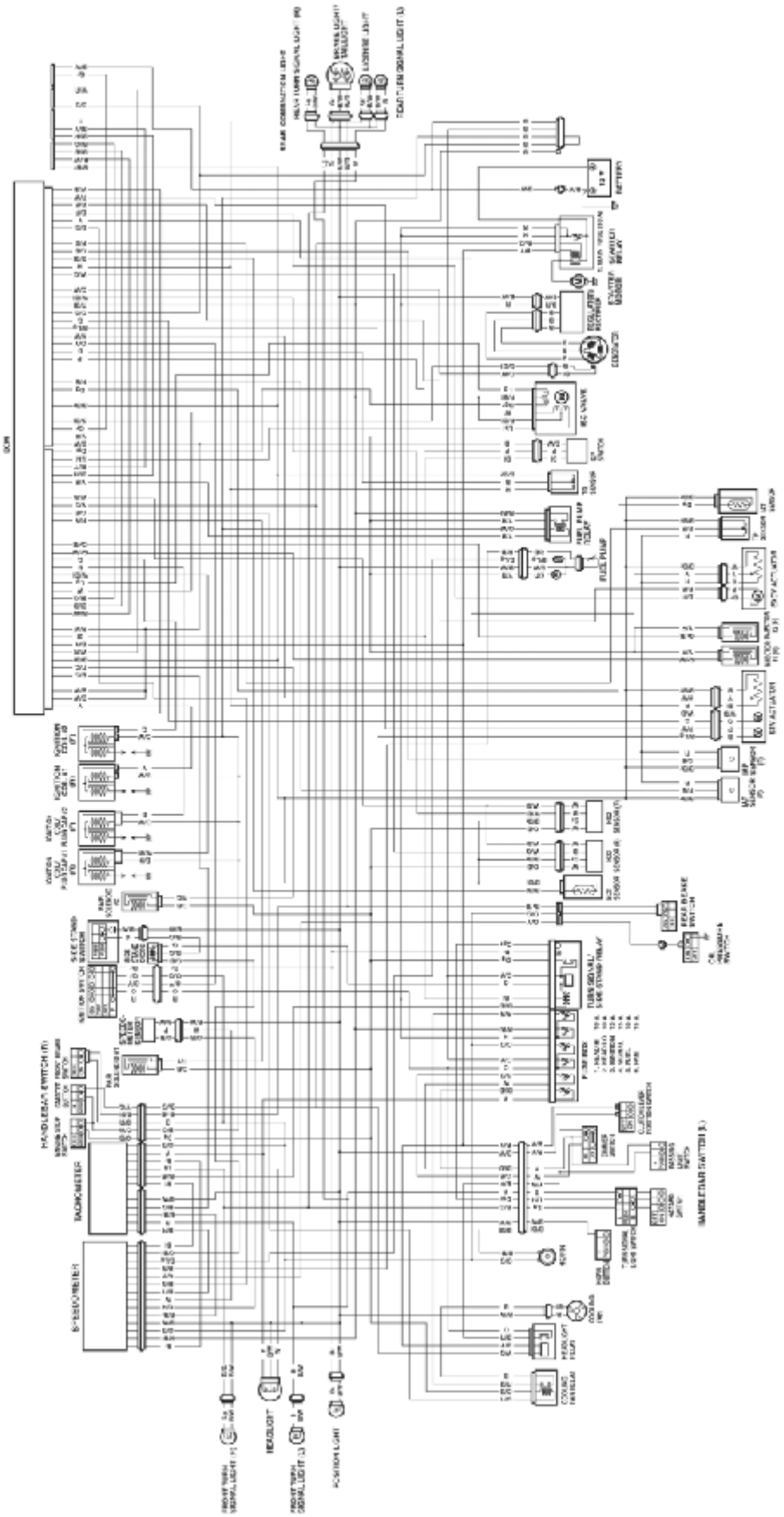

E-03, 28, 33

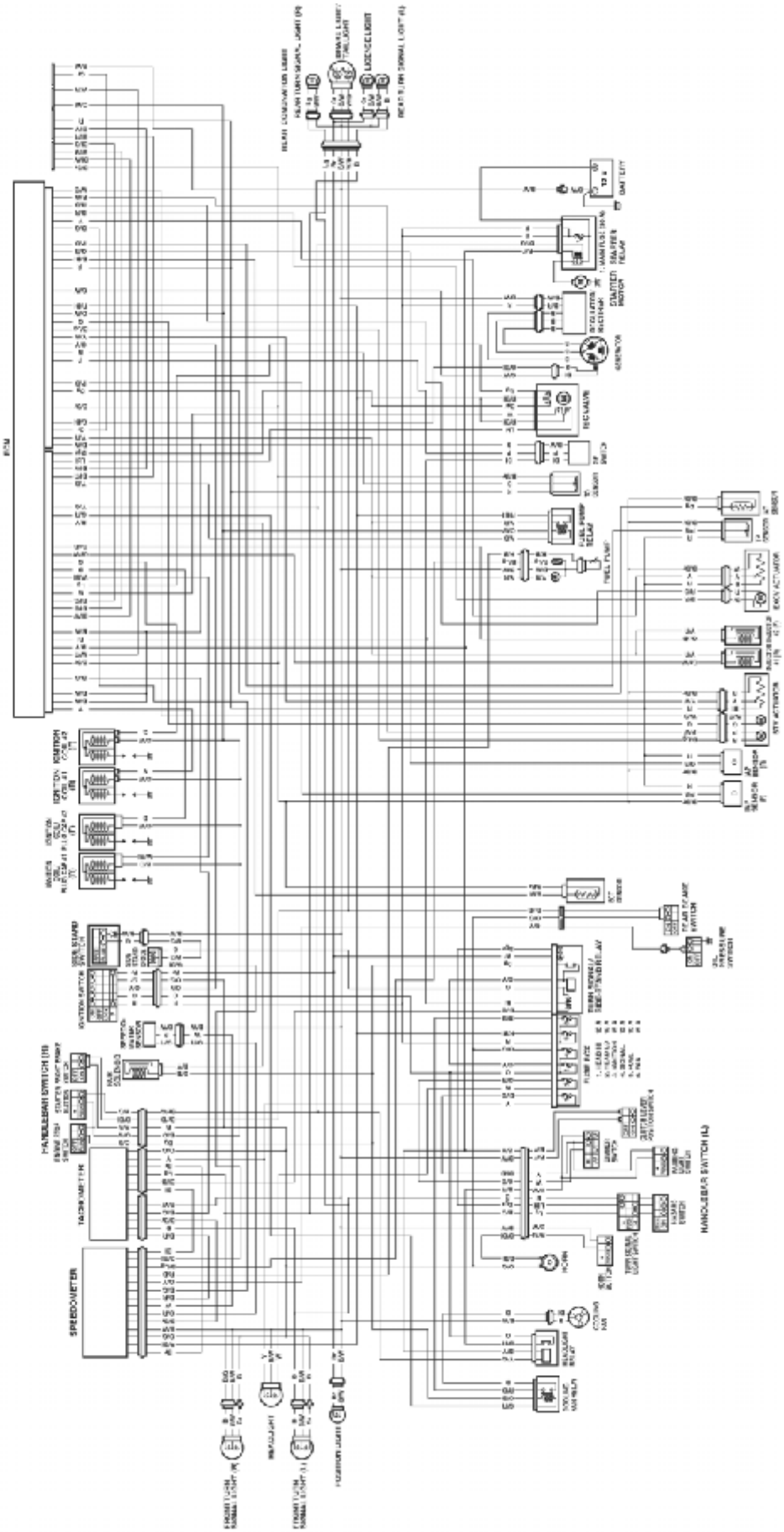

WIRING HARNESS ROUTING

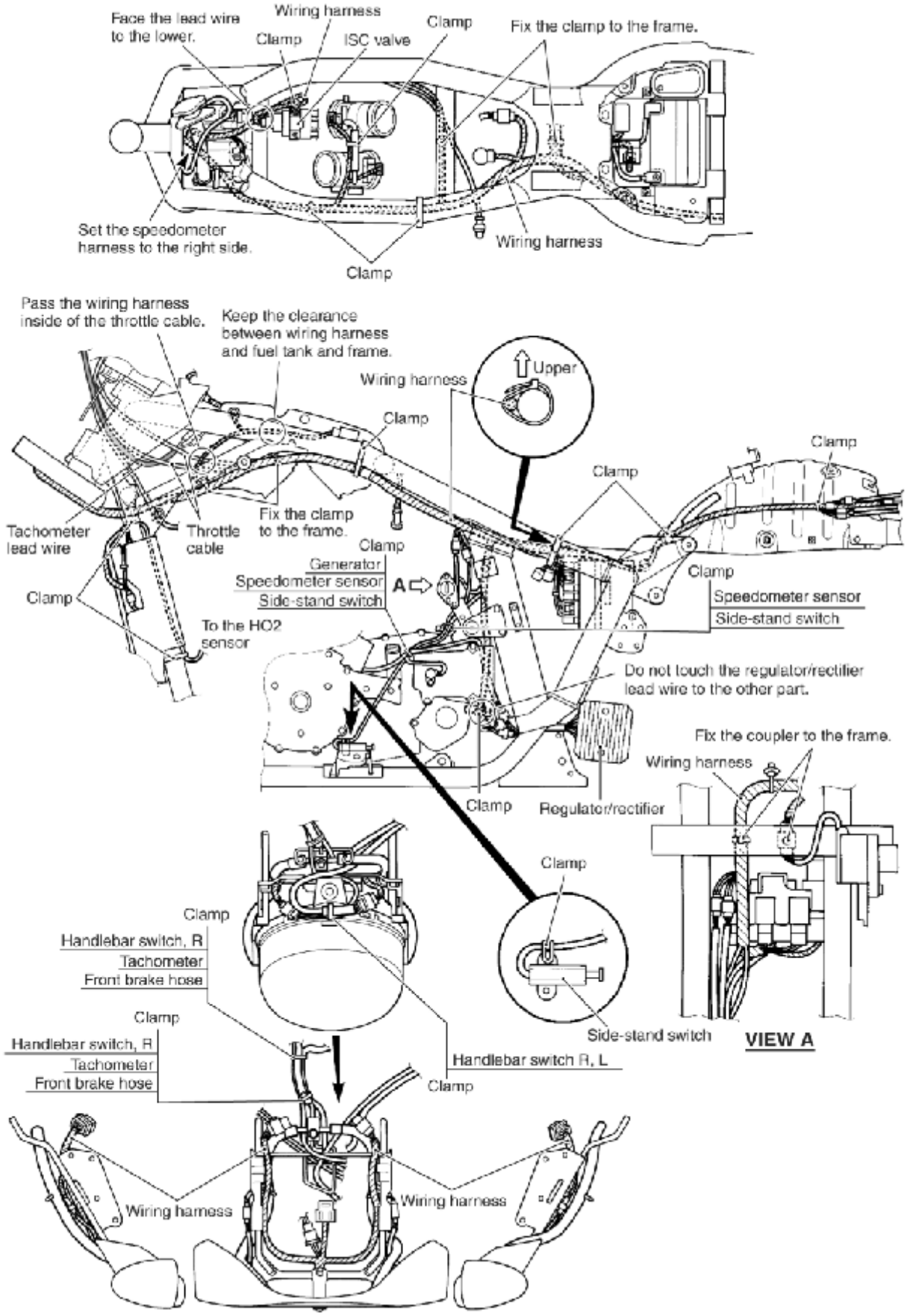

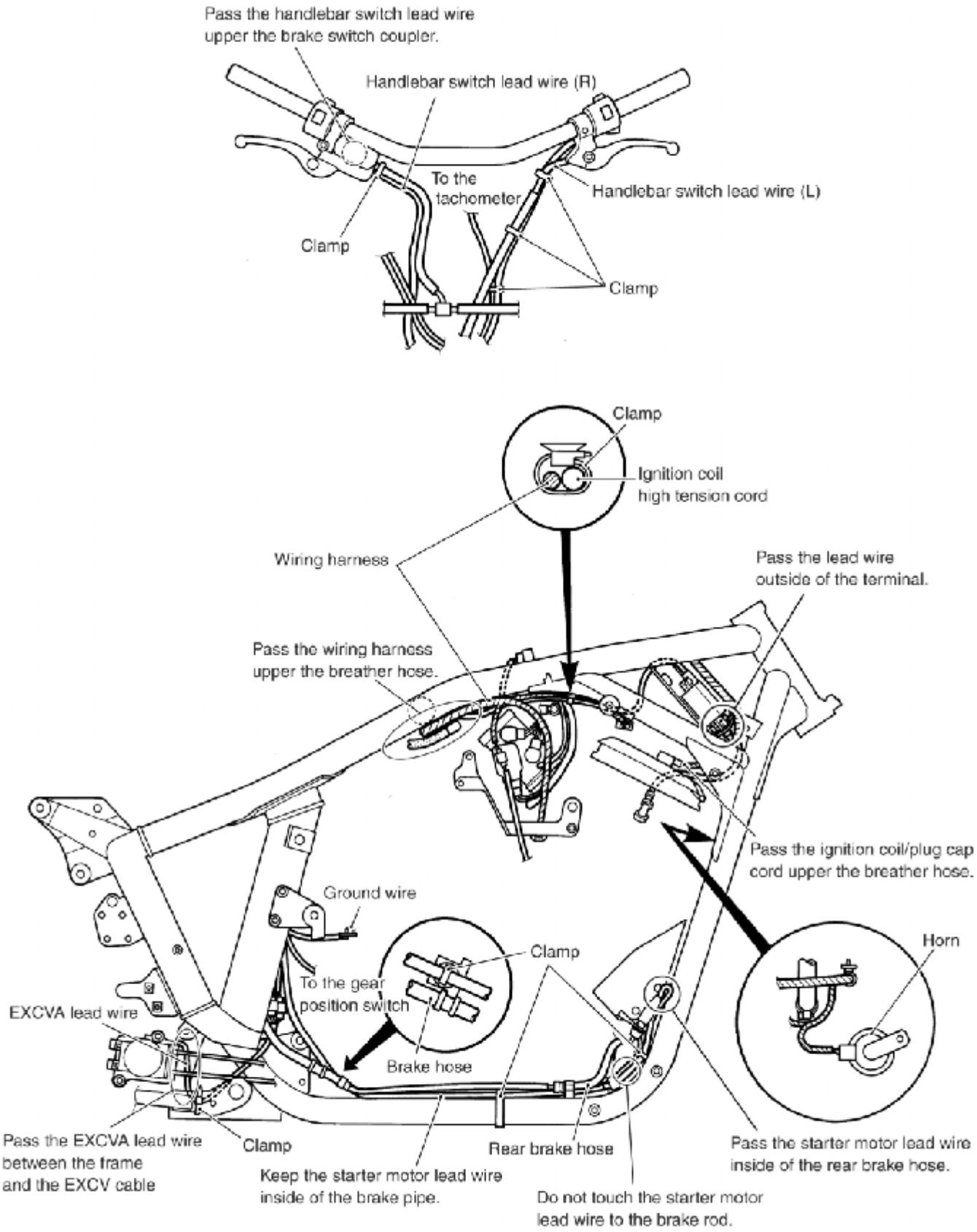
Pass the handlebar switch lead wire upper the brake switch coupler.
Handlebar switch lead wire (R)
To the tachometer
Handlebar switch lead wire (L)
Clamp
Clamp
Clamp
Ignition coil high tension cord
Wiring harness
Pass the lead wire outside of the terminal.
Pass the wiring harness upper the breather hose.
Pass the ignition coil/plug cap cord upper the breather hose.
Ground wire
Clamp
Horn
To the gear position switch
EXCVA lead wire
Brake hose
Pass the EXCVA lead wire between the frame and the EXCV cable
Clamp
Rear brake hose
Pass the starter motor lead wire inside of the rear brake hose.
Keep the starter motor lead wire inside of the brake pipe.
Do not touch the starter motor lead wire to the brake rod.

FRONT BRAKE HOSE ROUTING